Global LCD Panel Exchange Center www.panelook.com 屏库:全球液晶屏交易中心

MODEL NO. : TM150TDSG71

ISSUED DATE: 2015-06-10

VERSION : V1.0

■Preliminary Specification
□Final Product Specification

Customer :

Approved by	Notes

TIANMA Confirmed :

Prepared by	Checked by	Approved by
Gang.li		Longping Deng

TIANMA CONFIDENTIAL

This technical specification is subjected to change without notice

The information contained herein is the exclusive property of TIANMA MICRO-ELECTRONICS Corporation and shall not be distributed, reproduced, or disclosed in whole or in part without prior written permission of TIANMA MICRO-ELECTRONICS Corporation.

One step solution for LCD / PDP / OLED panel application: Datasheet, inventory and accessory! www.panelook.com

Global LCD Panel Exchange Center www.panelook.com 屏库:全球液晶屏交易中心

Table of Contents

Table of Contents 2
Record of Revision 3
1 General Specifications 4
2 Input/Output Terminals 5
3 Absolute Maximum Ratings 7
4 Electrical Characteristics 8
5 Dispaly Colors And Input Data Information 10
6 Timing Chart 12
7 Optical Characteristics 14
8 Environmental / Reliability Test 17
9 Mechanical Drawing 18
10 Markings 19
11 Packing Transportation And Delivery 20
12 Precautions for Use of LCD Modules 22

TIANMA CONFIDENTIAL

The information contained herein is the exclusive property of TIANMA MICRO-ELECTRONICS Corporation and shall not be distributed, reproduced, or disclosed in whole or in part without prior written permission of TIANMA MICRO-ELECTRONICS Corporation.

One step solution for LCD / PDP / OLED panel application: Datasheet, inventory and accessory! www.panelook.com

Global LCD Panel Exchange Center www.panelook.com 屏库:全球液晶屏交易中心

Record of Revision

Rev	Issued Date	Description	Editor
1.0	2015-06-10	Preliminary Product Specification Released.	Gang.li

TIANMA CONFIDENTIAL

The information contained herein is the exclusive property of TIANMA MICRO-ELECTRONICS Corporation and shall not be distributed, reproduced, or disclosed in whole or in part without prior written permission of TIANMA MICRO-ELECTRONICS Corporation.

One step solution for LCD / PDP / OLED panel application: Datasheet, inventory and accessory! www.panelook.com

Global LCD Panel Exchange Center www.panelook.com 屏库:全球液晶屏交易中心

1 General Specifications

Feature		Spec
Display Spec.	Size	15 inch
	Resolution	1024xRGBx768
	Technology Type	a-Si
	Pixel Configuration	RGB vertical stripe
	Pixel pitch(mm)	0.297(H) × 0.297(V)
	Display Mode	TM with Normally White
	Surface Treatment	Anti Glare
	Viewing Direction	12:00
	Gray Scale Inversion Direction	6:00
Mechanical Characteristics	LCM (W x H x D) (mm)	326.5(H)×253.5 (V) ×11.8 (D) (typ.)
	Active Area(mm)	304.128(W) x 228.096 (V) (typ.)
	With /Without TSP	Without TSP
	Connection Type	Socket
	Weight (g)	TBD
	Backlight	LED backlight type Replaceable lamp holder for backlight
Electrical Characteristics	Interface	LVDS 1 port
	Color Depth	16.2M/262K

Note 1: Viewing direction for best image quality is different from TFT definition. There is a 180 degree shift.

Note 2: Requirements on Environmental Protection: RoHS

Note 3: LCM weight tolerance: ± 5%

TIANMA CONFIDENTIAL

The information contained herein is the exclusive property of TIANMA MICRO-ELECTRONICS Corporation and shall not be distributed, reproduced, or disclosed in whole or in part without prior written permission of TIANMA MICRO-ELECTRONICS Corporation.

One step solution for LCD / PDP / OLED panel application: Datasheet, inventory and accessory! www.panelook.com

Global LCD Panel Exchange Center www.panelook.com 屏库:全球液晶屏交易中心

2 Input/Output Terminals

2.1 LCD PINS

CN1 socket(Module side): 185083-20121 (P-TWO ELECTRIC TECHNOLOGY CO., LTD.)

Pin No.	Symbol	Signal	Input data signal: 8bit	Input data signal:6bit	Remarks
1	VCC	Power supply	Power supply		
2	VCC				
3	GND	Ground	Ground		
4	REV	Selection of scan direction	High: Reverse scan Low or Open: Normal scan		
5	D0-	Pixel data	R0-R5,G0		
6	D0+				
7	GND	Ground	Ground		
8	D1-	Pixel data	G1-G5,B0-B1		
9	D1+				
10	GND	Ground	Ground		
11	D2-	Pixel data	B2-B5,DE		
12	D2+				
13	GND	Ground	Ground		
14	CLK-	Pixel clock	Pixel clock		
15	CLK+				
16	GND	Ground	Ground		
17	D3-	Pixel data	R6-R7, G6-G7, B6-B7	Ground	
18	D3+				
19	NC	Non connection	-		
20	SEL6/8	Selection of the number of colors	Low	High or Open	

TIANMA CONFIDENTIAL

The information contained herein is the exclusive property of TIANMA MICRO-ELECTRONICS Corporation and shall not be distributed, reproduced, or disclosed in whole or in part without prior written permission of TIANMA MICRO-ELECTRONICS Corporation.

One step solution for LCD / PDP / OLED panel application: Datasheet, inventory and accessory! www.panelook.com

Global LCD Panel Exchange Center www.panelook.com 屏库:全球液晶屏交易中心

2.2 BACKLIGHT PINS

CN2: MSB24038P5 (Produced by STM) or equivalent.

Pin	Symbol	Description
5	VDD	12V
4	GND	Ground
3	BRTC	Back light ON/OFF control: 5V-On / 0V-Off
2	PWM	PWM Luminance control
1	NC	NC

2.3 POSITIONS OF PLUG AND SOCKET

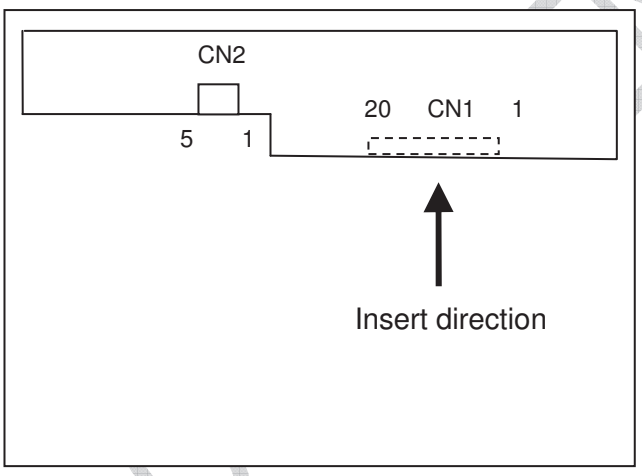

TIANMA CONFIDENTIAL

The information contained herein is the exclusive property of TIANMA MICRO-ELECTRONICS Corporation and shall not be distributed, reproduced, or disclosed in whole or in part without prior written permission of TIANMA MICRO-ELECTRONICS Corporation.

One step solution for LCD / PDP / OLED panel application: Datasheet, inventory and accessory! www.panelook.com

Global LCD Panel Exchange Center www.panelook.com 屏库:全球液晶屏交易中心

3 Absolute Maximum Ratings

AGND=GND=0V, Ta = 25℃

Parameter	Symbol	Rating	Unit	Remarks
Power Supply Voltage	VCC	-0.3~+3.96	V	Ta = 25°C
Input voltage for signals	Vi	-0.5~+3.96	V	Ta = 25°C
Storage temperature	Tst	-30 ~ +80	°C	Note 1
Operating temperature	Top	-20 ~ +70	°C	Note 1, 2
Absolute humidity	AH	≤ 70	g/m^3	Ta > 50°C

Note1: Temperature and relative humidity range is shown in the figure below.
(a) 90%RH Max. (Ta≤ 40°C)
(b) Wet-bulb temperature should be39°C Max. (Ta> 40°C)
(c) No condensation.
Note2: The temperature of panel display surface area should be -20°C Min and 70°C Max.

TIANMA CONFIDENTIAL

The information contained herein is the exclusive property of TIANMA MICRO-ELECTRONICS Corporation and shall not be distributed, reproduced, or disclosed in whole or in part without prior written permission of TIANMA MICRO-ELECTRONICS Corporation.

One step solution for LCD / PDP / OLED panel application: Datasheet, inventory and accessory! www.panelook.com

Global LCD Panel Exchange Center www.panelook.com 屏库:全球液晶屏交易中心

4 Electrical Characteristics

4.1 Driving For LCD

AGND=GND=0V, Ta = 25℃

Parameter		Symbol	min.	typ.	max.	Unit	Remarks
Power supply voltage		VCC	3.0	3.3	3.6	V	-
Power supply ripple		Vp-p			200	mV	Including spike noise
Power supply current		ICC	-	550	-	mA	Note 1
Permissible ripple voltage		VRP	-	-	100	mV	
Differential input voltage		| Vid |	250		450	mV	
Differential input threshold voltage for LVDS receiver	High	VTH	-	-	100	mV	VCM = 1.25V Note2
	Low	VTL	-100	-		mV	
Input voltage width for LVDS receiver		Vi	0	-	1.90	V	-
Terminating resistor		RT	-	100	-	Ω	-
Rush current		I_{rush}	-	-	1.5	A	Note3
Input voltage for MSL signals	High	VFH	0.7VCC		VCC	V	
	Low	VFL	0		0.3VCC	V	

Note 1: Black mode, 65MHz, at VCC = 3.3V.
Note 2: Common mode voltage for LVDS receiver.
Note 3: Measurement Conditions:

4.2 Driving For Backlight

(Ta=25°C) Note1

Parameter		Symbol	min.	typ.	max.	Unit	Remarks
Power supply voltage		VDD	10.8	12.0	12.6	V	
Power supply current		IDD	-	TBD	-	mA	
Light bar life time		Hr	30000	50000	-	Hour	Note1
Input voltage for PWM signal	High	VDFH1	2.0		5.0	V	
	Low	VDFL1	0		0.4	V	
Input voltage for BRTC signal	High	VDFH2	2.0		5.0	V	
	Low	VDFL2	0		0.4	V	
PWM frequency		fpwm	200		(20K)	Hz	
PWM pulse width		tPWH	10			us	

Note1: Optical performance should be evaluated at Ta=25℃.Only If LED is driven by high current, high ambient temperature & humidity condition. The life time of LED will be reduced. Operating life means brightness goes down to 50% of initial brightness. Typical operating life time is an estimated data.

TIANMA CONFIDENTIAL

The information contained herein is the exclusive property of TIANMA MICRO-ELECTRONICS Corporation and shall not be distributed, reproduced, or disclosed in whole or in part without prior written permission of TIANMA MICRO-ELECTRONICS Corporation.

One step solution for LCD / PDP / OLED panel application: Datasheet, inventory and accessory! www.panelook.com

Global LCD Panel Exchange Center www.panelook.com 屏库:全球液晶屏交易中心

4.3 Block Diagram

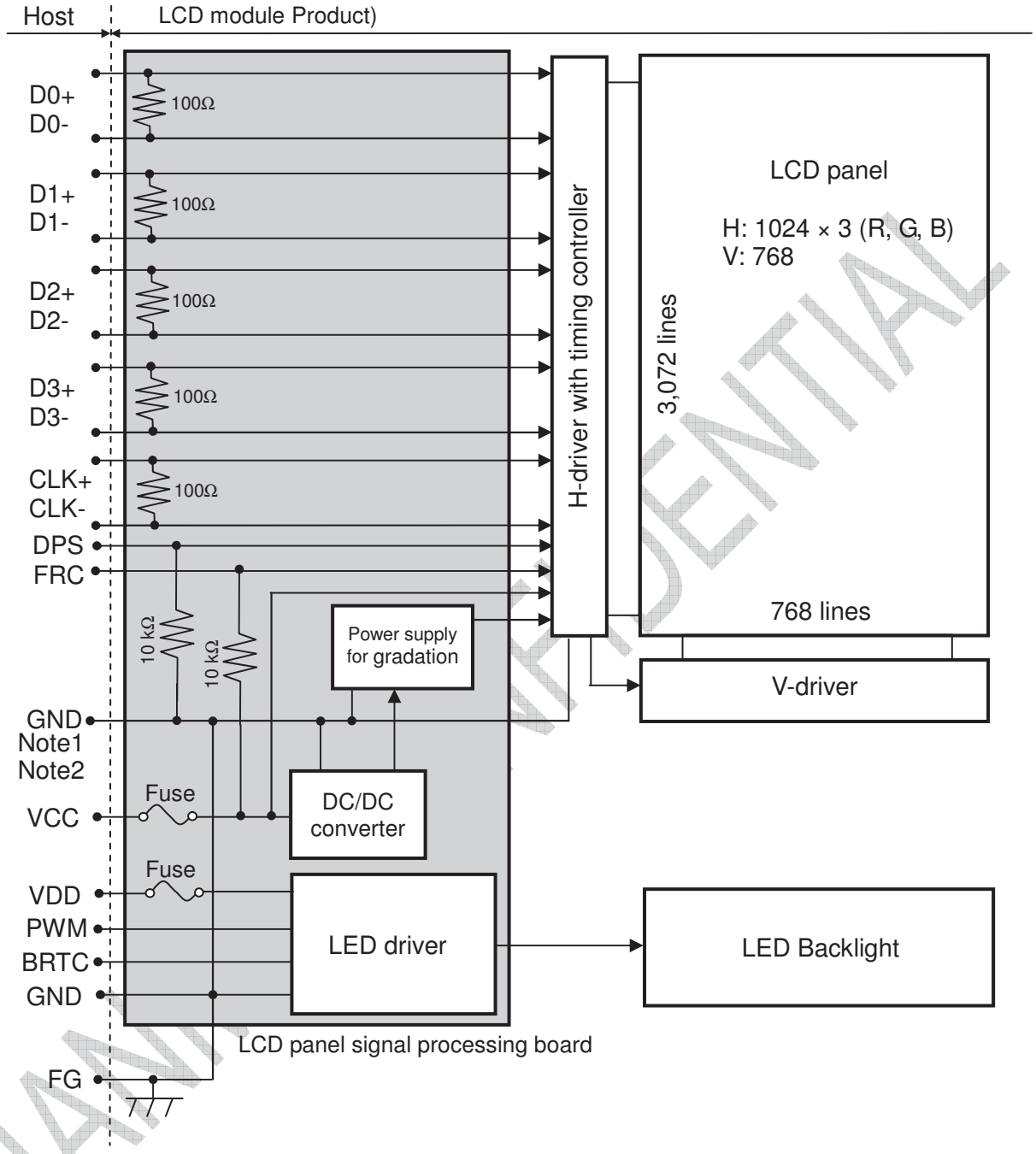

Note1: Relations between GND (Signal ground and LED driver ground) and FG (Frame ground) in the LCD module are as follows:

GND - FG	Connected

Note2: GND and FG must be connected to customer equipment's ground, and it is recommended that these grounds be connected together in customer equipment.

The information contained herein is the exclusive property of TIANMA MICRO-ELECTRONICS Corporation and shall not be distributed, reproduced, or disclosed in whole or in part without prior written permission of TIANMA MICRO-ELECTRONICS Corporation.

One step solution for LCD / PDP / OLED panel application: Datasheet, inventory and accessory! www.panelook.com

Global LCD Panel Exchange Center www.panelook.com 屏库:全球液晶屏交易中心

5 DISPLAY COLORS AND INPUT DATA INFORMATION

5.1 DISPLAY COLORS AND DATA SIGNAL

This product can display in equivalent to 16,194,277 colors in 253 scales. Also the relation between display colors and input data signals is as the following table. And it can display in equivalent to 262,144 colors in 64 scales, without data signals R7, R6, G7, G6, B7, B6 in the following table.

Display colors		Data signal （0:Low level，1:High Level）																							
		R7	R6	R5	R4	R3	R2	R1	R0	G7	G6	G5	G4	G3	G2	G1	G0	B7	B6	B5	B4	B3	B2	B1	B0
Basic Color	Black	0	0	0	0	0	0	0	0	0	0	0	0	0	0	0	0	0	0	0	0	0	0	0	0
	Blue	0	0	0	0	0	0	0	0	0	0	0	0	0	0	0	0	1	1	1	1	1	1	1	1
	Red	1	1	1	1	1	1	1	1	0	0	0	0	0	0	0	0	0	0	0	0	0	0	0	0
	Magenta	1	1	1	1	1	1	1	1	0	0	0	0	0	0	0	0	1	1	1	1	1	1	1	1
	Green	0	0	0	0	0	0	0	0	1	1	1	1	1	1	1	1	0	0	0	0	0	0	0	0
	Cyan	0	0	0	0	0	0	0	0	1	1	1	1	1	1	1	1	1	1	1	1	1	1	1	1
	Yellow	1	1	1	1	1	1	1	1	1	1	1	1	1	1	1	1	0	0	0	0	0	0	0	0
	White	1	1	1	1	1	1	1	1	1	1	1	1	1	1	1	1	1	1	1	1	1	1	1	1
Red grayscale	Black	0	0	0	0	0	0	0	0	0	0	0	0	0	0	0	0	0	0	0	0	0	0	0	0
	Dark	0	0	0	0	0	0	0	1	0	0	0	0	0	0	0	0	0	0	0	0	0	0	0	0
	↑	0	0	0	0	0	0	1	0	0	0	0	0	0	0	0	0	0	0	0	0	0	0	0	0
	↕					:								:								:			
	Bright Red	1	1	1	1	1	1	0	1	0	0	0	0	0	0	0	0	0	0	0	0	0	0	0	0
		1	1	1	1	1	1	1	0	0	0	0	0	0	0	0	0	0	0	0	0	0	0	0	0
		1	1	1	1	1	1	1	1	0	0	0	0	0	0	0	0	0	0	0	0	0	0	0	0
Green grayscale	Black	0	0	0	0	0	0	0	0	0	0	0	0	0	0	0	0	0	0	0	0	0	0	0	0
	Dark	0	0	0	0	0	0	0	0	0	0	0	0	0	0	0	1	0	0	0	0	0	0	0	0
	↑	0	0	0	0	0	0	0	0	0	0	0	0	0	0	1	0	0	0	0	0	0	0	0	0
	↕					:								:								:			
	Bright Green	0	0	0	0	0	0	0	0	1	1	1	1	1	1	0	1	0	0	0	0	0	0	0	0
		0	0	0	0	0	0	0	0	1	1	1	1	1	1	1	0	0	0	0	0	0	0	0	0
		0	0	0	0	0	0	0	0	1	1	1	1	1	1	1	1	0	0	0	0	0	0	0	0
Blue grayscale	Black	0	0	0	0	0	0	0	0	0	0	0	0	0	0	0	0	0	0	0	0	0	0	0	0
	Dark	0	0	0	0	0	0	0	0	0	0	0	0	0	0	0	0	0	0	0	0	0	0	0	1
	↑	0	0	0	0	0	0	0	0	0	0	0	0	0	0	0	0	0	0	0	0	0	0	1	0
	↕					:								:								:			
	Bright Blue	0	0	0	0	0	0	0	0	0	0	0	0	0	0	0	0	1	1	1	1	1	1	0	1
		0	0	0	0	0	0	0	0	0	0	0	0	0	0	0	0	1	1	1	1	1	1	1	0
		0	0	0	0	0	0	0	0	0	0	0	0	0	0	0	0	1	1	1	1	1	1	1	1

TIANMA CONFIDENTIAL

The information contained herein is the exclusive property of TIANMA MICRO-ELECTRONICS Corporation and shall not be distributed, reproduced, or disclosed in whole or in part without prior written permission of TIANMA MICRO-ELECTRONICS Corporation.

One step solution for LCD / PDP / OLED panel application: Datasheet, inventory and accessory! www.panelook.com

Global LCD Panel Exchange Center www.panelook.com 屏库:全球液晶屏交易中心

5.2 DATA MAP

(1) LVDS Input data signal: 8bit

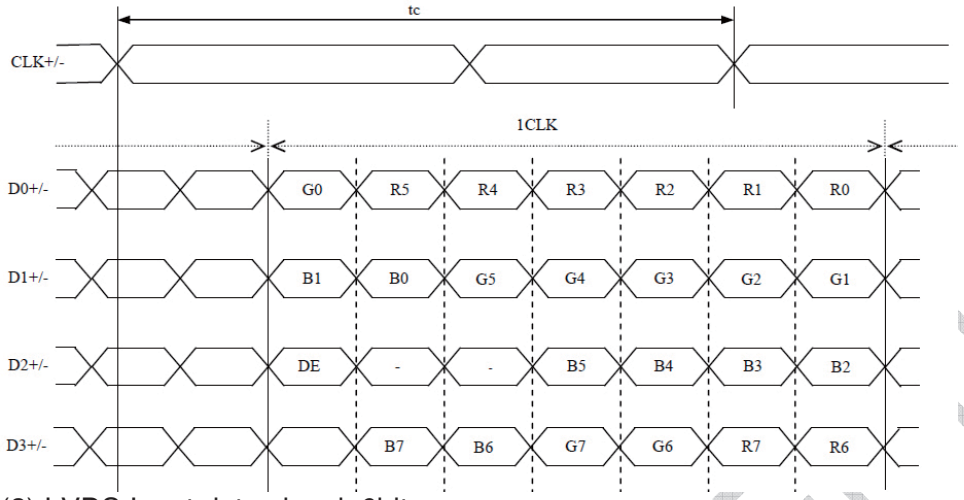

(2) LVDS Input data signal: 6bit

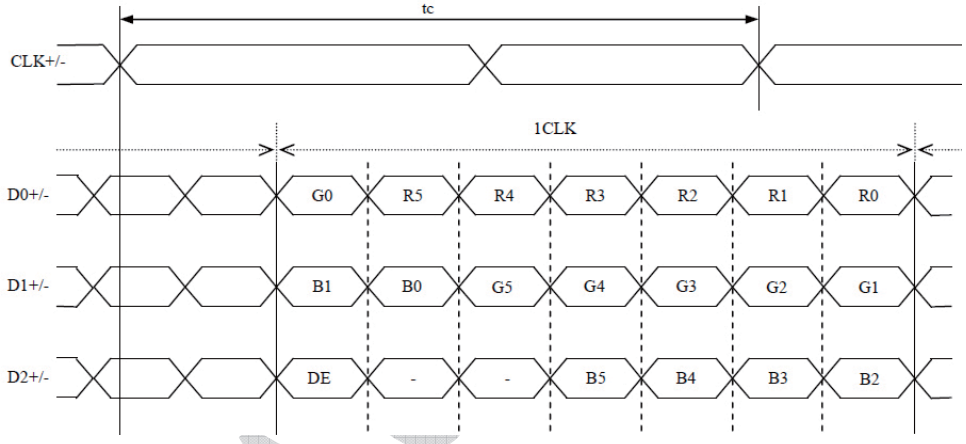

The information contained herein is the exclusive property of TIANMA MICRO-ELECTRONICS Corporation and shall not be distributed, reproduced, or disclosed in whole or in part without prior written permission of TIANMA MICRO-ELECTRONICS Corporation.

One step solution for LCD / PDP / OLED panel application: Datasheet, inventory and accessory! www.panelook.com

Global LCD Panel Exchange Center www.panelook.com 屏库:全球液晶屏交易中心

6 Timing Chart

6.1 TIMING CHARACTERISTICS

Parameter		Symbol	min.	typ.	max.	Unit	Remarks
Clock	Frequency	1/tc	52	56.88	71	MHz	17.58ns (typ.)
		tc	19.23	17.58	14.08	ns	
Horizontal signals	Cycle	th	1114	1200	1400	CLK	
	Display period	thd		1024			-
Vertical signals	Cycle	tv	778	790	845	H	60.0Hz(typ.)
	Display period	tvd		768			-

6.2 INPUT SIGNAL TIMING CHART

Horizontal timing

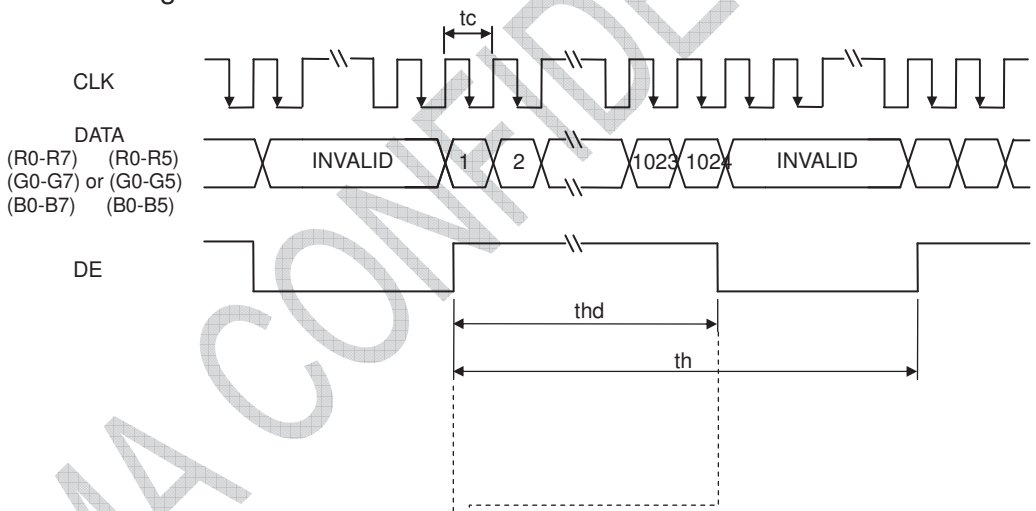

Vertical timing

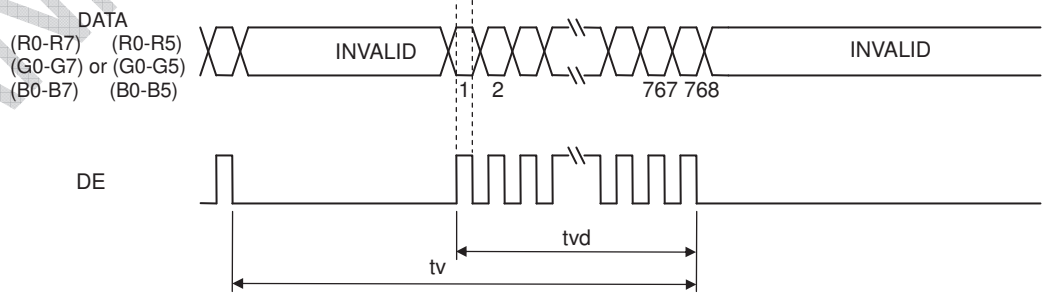

TIANMA CONFIDENTIAL

The information contained herein is the exclusive property of TIANMA MICRO-ELECTRONICS Corporation and shall not be distributed, reproduced, or disclosed in whole or in part without prior written permission of TIANMA MICRO-ELECTRONICS Corporation.

One step solution for LCD / PDP / OLED panel application: Datasheet, inventory and accessory! www.panelook.com

Global LCD Panel Exchange Center www.panelook.com 屏库:全球液晶屏交易中心

6.3 PIXEL DATA ALIGNMENT OF DISPLAY IMAGE

The following chart is the coordinates of per pixel

D(1,1)

B	G	R

D(1,1)	D(2,1)	D(3,1)	•••	D(1024,1)
D(1,2)	D(2,2)	D(3,2)	•••	D(1024,2)
D(1,3)	D(2,3)	D(3,3)	•••	D(1024,3)
⋮	⋮	⋮	⋮	⋮
D(1,768)	D(2,768)	D(3,768)	•••	D(1024,768)

6.4 POWER SUPPLY VOLTAGE SEQUENCE

6.4.1 The sequence of backlight and power

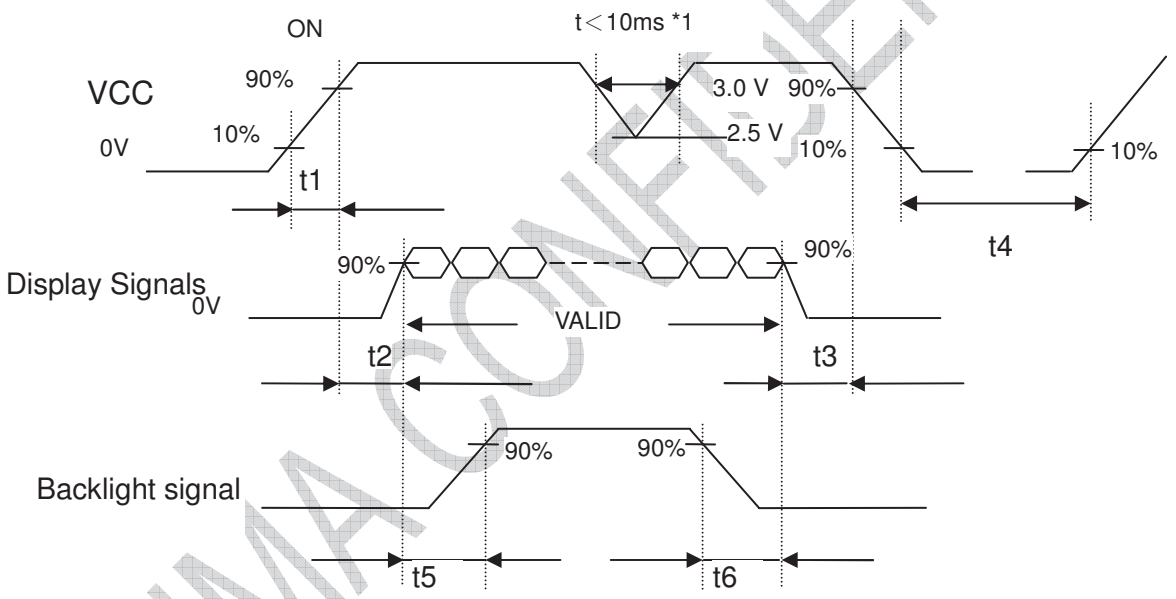

Timing Specifications:

t1 :0.5ms<t1 <10ms;
t2 :0.5 ms<t2 <50ms;
t3 :0ms<t3 <50ms;
t4 :t4 >1000ms;
t5 :t5 >200ms;
t6 :t6 >200ms;

TIANMA CONFIDENTIAL

The information contained herein is the exclusive property of TIANMA MICRO-ELECTRONICS Corporation and shall not be distributed, reproduced, or disclosed in whole or in part without prior written permission of TIANMA MICRO-ELECTRONICS Corporation.

One step solution for LCD / PDP / OLED panel application: Datasheet, inventory and accessory! www.panelook.com

Global LCD Panel Exchange Center www.panelook.com 屏库:全球液晶屏交易中心

7 Optical Characteristics

Item		Symbol	Condition	Min	Typ.	Max	Unit	Remark
View Angles		θT	CR≧10	70	80	-	Degree	Note 2
		θB		70	80	-		
		θL		70	80	-		
		θR		70	80	-		
Contrast Ratio		CR	θ=0°	600	800	-	-	Note1 Note3
Luminance uniformity		U		-	1.25	1.33	-	Note6
Response Time		T_{ON}	25℃	-	8	12	ms	Note1 Note4
		T_{OFF}						
Chromaticity	White	x	Backlight is on	0.263	0.313	0.363	-	Note5 Note1
		y		0.279	0.329	0.379		
	Red	x		0.582	0.632	0.682		
		y		0.305	0.355	0.405		
	Green	x		0.294	0.344	0.394		
		y		0.558	0.608	0.658		
	Blue	x		0.107	0.157	0.207		
		y		0.037	0.087	0.137		
NTSC				50	60	-	%	Note5
Luminance		L		400	450	-	cd/㎡	Note7

Test Conditions:

1. The ambient temperature is 25℃. VDD= 3.3V, VCC=12V, 100% brightness,
2. The test systems refer to Note 1 and Note2.

TIANMA CONFIDENTIAL

The information contained herein is the exclusive property of TIANMA MICRO-ELECTRONICS Corporation and shall not be distributed, reproduced, or disclosed in whole or in part without prior written permission of TIANMA MICRO-ELECTRONICS Corporation.

One step solution for LCD / PDP / OLED panel application: Datasheet, inventory and accessory! www.panelook.com

Global LCD Panel Exchange Center www.panelook.com 屏库:全球液晶屏交易中心

Note 1: Definition of optical measurement system.

The optical characteristics should be measured in dark room. After 5 Minutes operation, the optical properties are measured at the center point of the LCD screen. All input terminals LCD panel must be ground when measuring the center area of the panel.

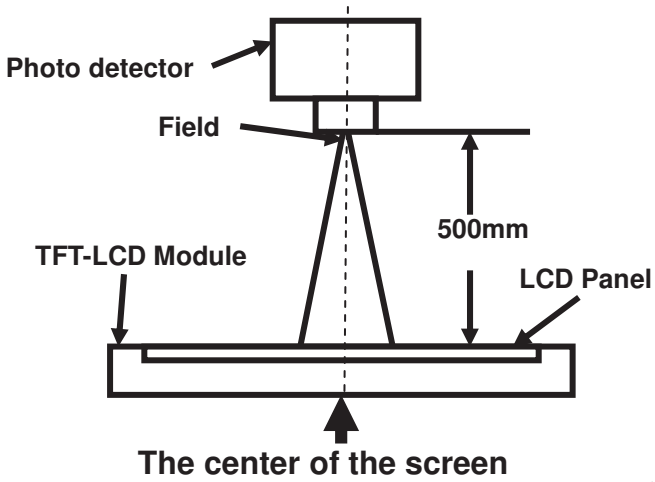

Item	Photo detector	Field
Contrast Ratio	SR-3A	1°
Luminance		
Chromaticity		
Lum Uniformity		
Response Time	BM-7A	2°

Note 2: Definition of viewing angle range and measurement system.

viewing angle is measured at the center point of the LCD by CONOSCOPE(ergo-80)。

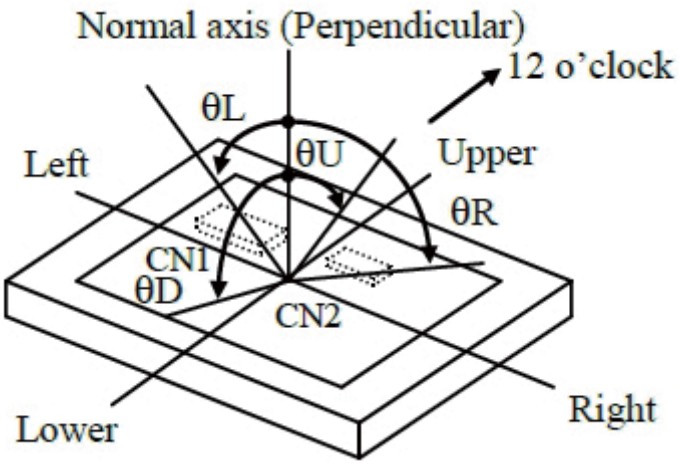

Note 3: Definition of contrast ratio

$$\text{Contrast ratio (CR)} = \frac{\text{Luminance measured when LCD is on the "White" state}}{\text{Luminance measured when LCD is on the "Black" state}}$$

"White state ": The state is that the LCD should drive by Vwhite.

"Black state": The state is that the LCD should drive by Vblack.

Vwhite: To be determined Vblack: To be determined.

The information contained herein is the exclusive property of TIANMA MICRO-ELECTRONICS Corporation and shall not be distributed, reproduced, or disclosed in whole or in part without prior written permission of TIANMA MICRO-ELECTRONICS Corporation.

One step solution for LCD / PDP / OLED panel application: Datasheet, inventory and accessory! www.panelook.com

Global LCD Panel Exchange Center www.panelook.com 屏库:全球液晶屏交易中心

Note 4: Definition of Response time

The response time is defined as the LCD optical switching time interval between "White" state and "Black" state. Rise time (T_{ON}) is the time between photo detector output intensity changed from 90% to 10%. And fall time (T_{OFF}) is the time between photo detector output intensity changed from 10% to 90%.

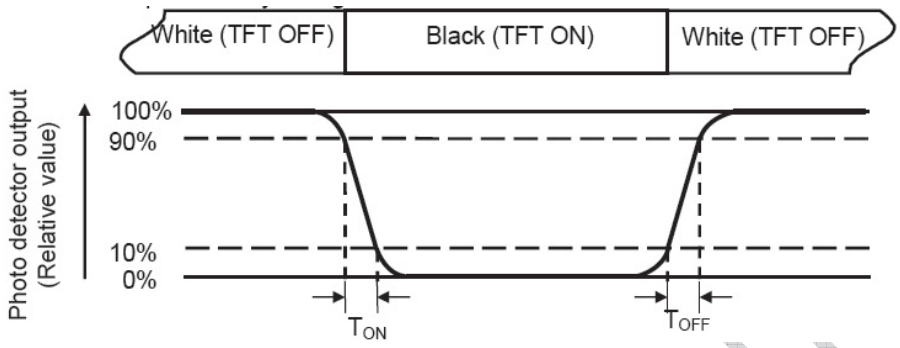

Note 5: Definition of color chromaticity (CIE1931)

Color coordinates measured at center point of LCD.

Note 6: Definition of Luminance Uniformity

Active area is divided into 9 measuring areas (Refer Fig. 2). Every measuring point is placed at the center of each measuring area.

Luminance Uniformity (U) = Lmin/ Lmax

L-------Active area length W----- Active area width

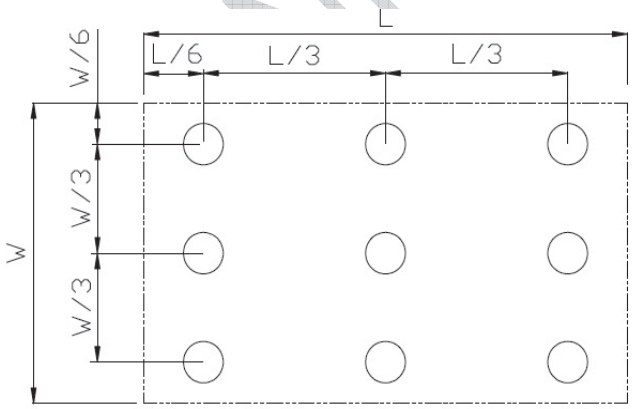

Lmax: The measured Maximum luminance of all measurement position.

Lmin: The measured Minimum luminance of all measurement position.

Note 7: Definition of Luminance:

Measure the luminance of white state at center point.

The information contained herein is the exclusive property of TIANMA MICRO-ELECTRONICS Corporation and shall not be distributed, reproduced, or disclosed in whole or in part without prior written permission of TIANMA MICRO-ELECTRONICS Corporation.

One step solution for LCD / PDP / OLED panel application: Datasheet, inventory and accessory! www.panelook.com

Global LCD Panel Exchange Center www.panelook.com 屏库:全球液晶屏交易中心

8 Environmental / Reliability Test

No	Test Item	Condition	Remarks
1	High Temperature Operation	Ts = +70℃, 240 hours (Note1)	IEC60068-2-1:2007 GB2423.2-2008
2	Low Temperature Operation	Ta = -20℃, 240 hours (Note1)	IEC60068-2-1:2007 GB2423.1-2008
3	High Temperature Storage	Ta = +80℃, 240 hours	IEC60068-2-1:2007 GB2423.2-2008
4	Low Temperature Storage	Ta = -30℃, 240 hours	IEC60068-2-1:2007 GB2423.1-2008
5	Storage at High Temperature and Humidity	Ta = +50℃, 80% RH max, 240hours	IEC60068-2-78 :2001 GB/T2423.3—2006
6	Thermal Shock (non-operation)	-20℃ 30 min ~ +60℃ 30 min, Change time:5min, 20 Cycle	Start with cold temperature, End with high temperature, IEC60068-2-14:1984, GB2423.22-2002
7	ESD(Operation)	C=150pF, R=330Ω, 5point/panel Air: ±15Kv, 9points,25times/point; Contact: ±8Kv, 9points,25times/point (Environment: 15℃~35℃, 30%~60%. 86Kpa~106Kpa)	IEC61000-4-2:2001 GB/T17626.2-2006
8	Package Drop Test	Height: 60cm, 1corner, 3edges, 6surfaces	IEC60068-2-32:1990 GB/T2423.8—1995
9	Vibration (Non-operation)	Frequency range:5~100Hz,11.76m/s^2 1minute/cycle X,Y,Z directions 50times each directions	IEC600682-6:1982 GB2423.10-1995
10	Shock (Non-operation)	30G,11ms,±X,Y,Z directions,3times For each direction	IEC60068-2-27:1987 GB/T2423.5—1995

Note1: Ts is the temperature of panel's surface.

Note2: Ta is the ambient temperature of sample.

Note3: Before cosmetic and function test, the product must have enough recovery time, at least 2 hours at room temperature.

Note 4: In the standard condition, there shall be no practical problem that may affect the display function. After the reliability test, the product only guarantees operation, but don't guarantee all of the cosmetic specification.

TIANMA CONFIDENTIAL

The information contained herein is the exclusive property of TIANMA MICRO-ELECTRONICS Corporation and shall not be distributed, reproduced, or disclosed in whole or in part without prior written permission of TIANMA MICRO-ELECTRONICS Corporation.

One step solution for LCD / PDP / OLED panel application: Datasheet, inventory and accessory! www.panelook.com

9 Mechanical Drawing

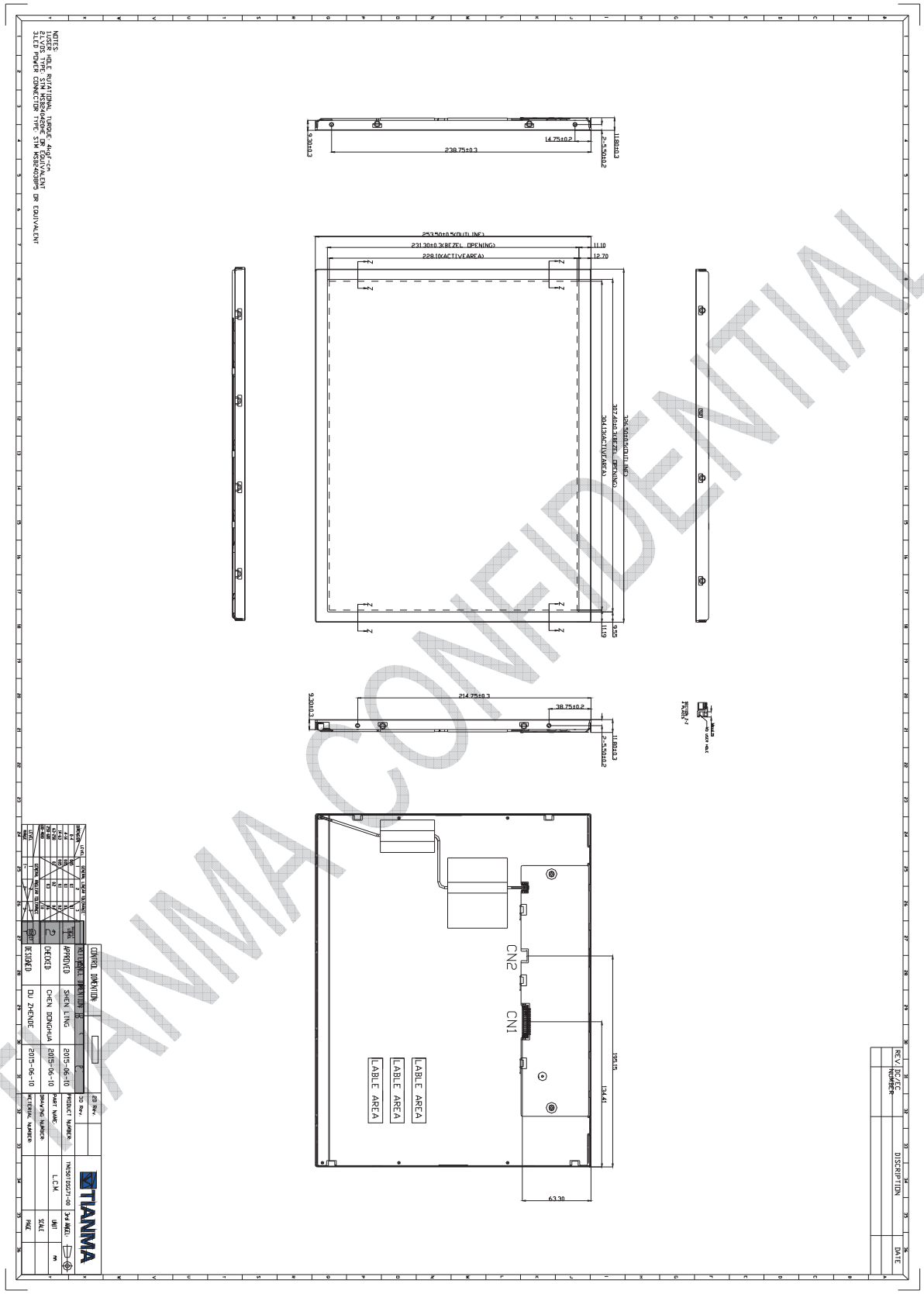

The information contained herein is the exclusive property of TIANMA MICRO-ELECTRONICS Corporation and shall not be distributed, reproduced, or disclosed in whole or in part without prior written permission of TIANMA MICRO-ELECTRONICS Corporation.

Global LCD Panel Exchange Center www.panelook.com 屏库:全球液晶屏交易中心

10 MARKINGS

The various markings are attached to this product. See “10.2 INDECATION LOCATIONS” for attachment positions.

10.1 PRODUCT LABEL

Note1: The meaning of OEM number

•Example: TM5XG10A55SA1SA19CF0001

TM5XG10A55SA1SA1	9CF	0001
AVIC internal code	**Date code**	**S/N**

Date code:

1st Character Year Codes

Month	2010	2011	2012	2013	2014	2015	2016	2017	2018	So on
Code	0	1	2	3	4	5	6	7	8	

2nd Character Month Codes

Month	January	February	March	April	May	June	July	August	September	October	November	December
Code	1	2	3	4	5	6	7	8	9	A	B	C

3rd Character Day Codes

Day	1st	2nd	3rd	4th	5th	6th	7th	8th	9th	10th	11st
Code	1	2	3	4	5	6	7	8	9	A	B
Day	12nd	13rd	14th	15th	16th	17th	18th	19th	20th	21st	22nd
Code	C	D	E	F	G	H	I	J	K	L	M
Day	23rd	24nd	25st	26nd	27rd	28th	29th	30th	31st		
Code	N	O	P	Q	R	S	T	U	V		

Note2: Do not attach anything such as label and so on, on the product label! In case repair the product, AVIC needs the contents of product label such as the lot number, inspection date and so on, to identify the warranty period with individual product. If AVIC cannot decipher the contents of product label, such repair shall be entitled to charge. Also AVIC may give a new lot number to reconditioned products.

The information contained herein is the exclusive property of TIANMA MICRO-ELECTRONICS Corporation and shall not be distributed, reproduced, or disclosed in whole or in part without prior written permission of TIANMA MICRO-ELECTRONICS Corporation.

One step solution for LCD / PDP / OLED panel application: Datasheet, inventory and accessory! www.panelook.com

Global LCD Panel Exchange Center www.panelook.com 屏库:全球液晶屏交易中心

11 PACKING, TRANSPORTATION AND DELIVERY

Tianma will pack products to deliver to customer in accordance with Tianma packing specifications, and will deliver products to customer in such a state that products will not suffer from a damage during transportation .The delivery conditions are as follows.

11.1 PACKING

(1) Packing box
10 products are packed up with the maximum in a packing box (See "11.5 OUTLINE FIGURE FOR PACKING ").
Products are put into a plastic bag for prevention of moisture with cushion, and then the bag is sealed up with heat sealing.
The type name and quality are shown on outside of the packing box, either labeling or printing.
(2) Pallet Packing
① Packing boxes are tied on a cardboard pallet. (4 boxes×3 tiers maximum)
② Cardboard sleeve and top cap are attached to the packing boxes, and then they are fixed by a band.

11.2 INSPECTION RECORD SHEET

Inspection record sheets are included in the packing box with delivery products to customer. It is summarized to a number of products for pass/fail assessment.

11.3 TRANSPORTATION

The product is transported by vehicle, aircraft or shipment in the state of pallet packing.

11.4 Packing Material

No	Item	Model(Material)	Dimensions (mm)	Unit Weigt (Kg)	Quantity	Remark
1	LCM module	TM150TDSG70-01	326.5x253.5x11.8	TBD	10	
2	Partition broad	Corrugated paper	384x256	0.02	2	
3	Anti-static Bag	LD-PE	435x325x0.05	0.001	10	Anti-static
4	EPP1	EPP	424x355x95	0.25	2	
5	EPP2	EPP	424x75x50	0.1	1	
6	Carton-inside	Corrugated paper	438x402x464	1.2	1	
7	Model Label	Paper		0.001	10	
8	Barcode Label	Paper		0.001	1	
9	Total weight	TBD±5%				

TIANMA CONFIDENTIAL

The information contained herein is the exclusive property of TIANMA MICRO-ELECTRONICS Corporation and shall not be distributed, reproduced, or disclosed in whole or in part without prior written permission of TIANMA MICRO-ELECTRONICS Corporation.

One step solution for LCD / PDP / OLED panel application: Datasheet, inventory and accessory! www.panelook.com

Global LCD Panel Exchange Center www.panelook.com 屏库:全球液晶屏交易中心

11.5 OUTLINE FIGURE FOR PACKING

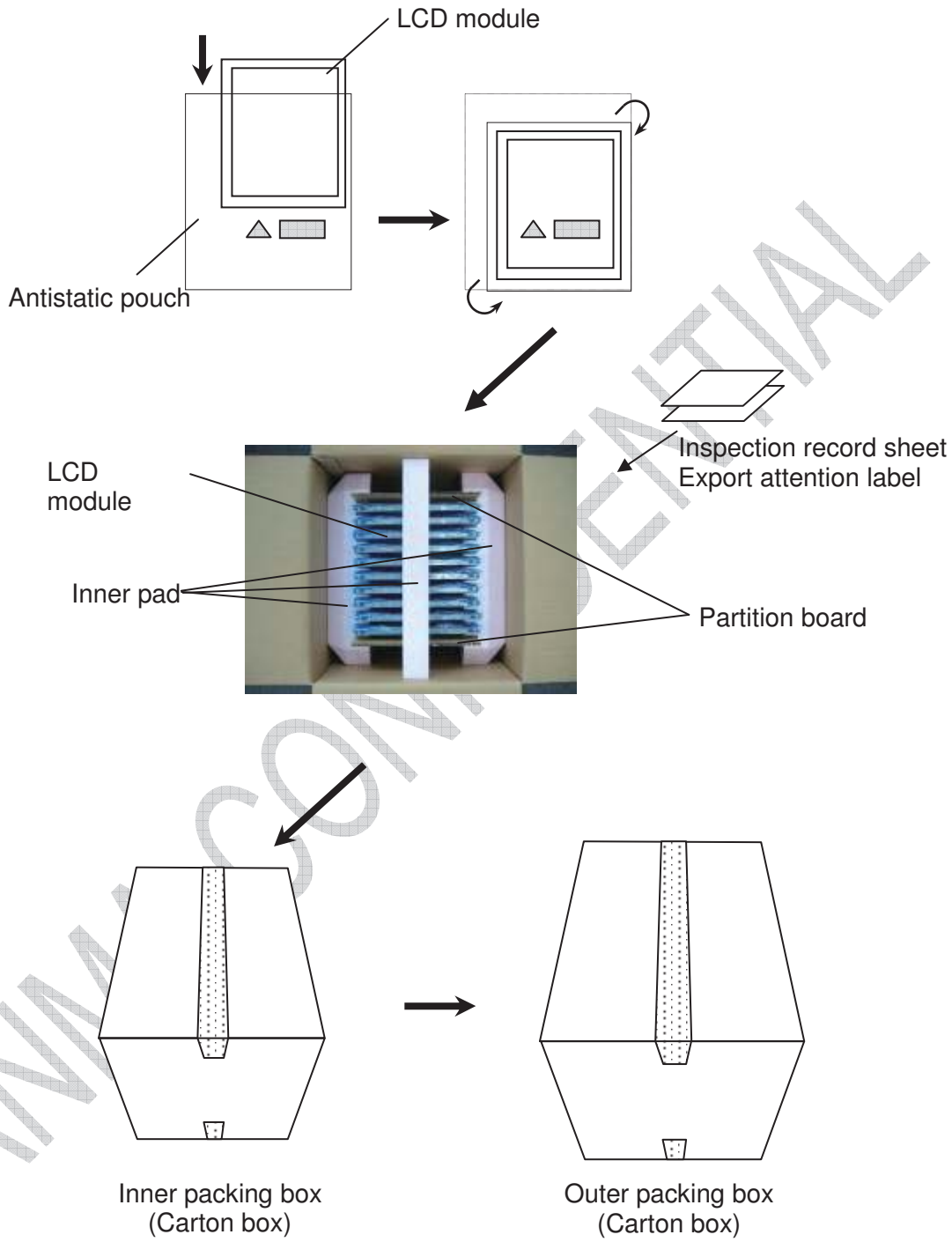

TIANMA CONFIDENTIAL

The information contained herein is the exclusive property of TIANMA MICRO-ELECTRONICS Corporation and shall not be distributed, reproduced, or disclosed in whole or in part without prior written permission of TIANMA MICRO-ELECTRONICS Corporation.

One step solution for LCD / PDP / OLED panel application: Datasheet, inventory and accessory! www.panelook.com

Global LCD Panel Exchange Center www.panelook.com 屏库:全球液晶屏交易中心

12 Precautions for Use of LCD Modules

12.1 Handling Precautions

12.1.1 The display panel is made of glass. Do not subject it to a mechanical shock by dropping it from a high place, etc.

12.1.2 If the display panel is damaged and the liquid crystal substance inside it leaks out, be sure not to get any in your mouth, if the substance comes into contact with your skin or clothes, promptly wash it off using soap and water.

12.1.3 Do not apply excessive force to the display surface or the adjoining areas since this may cause the color tone to vary.

12.1.4 The polarizer covering the display surface of the LCD module is soft and easily scratched. Handle this polarizer carefully.

12.1.5 If the display surface is contaminated, breathe on the surface and gently wipe it with a soft dry cloth. If still not completely clear, moisten cloth with one of the following solvents:

- Isopropyl alcohol
- Ethyl alcohol

Solvents other than those mentioned above may damage the polarizer. Especially, do not use the following:

- Water
- Ketone
- Aromatic solvents

12.1.6 Do not attempt to disassemble the LCD Module.

12.1.7 If the logic circuit power is off, do not apply the input signals.

12.1.8 To prevent destruction of the elements by static electricity, be careful to maintain an optimum work environment.

12.1.8.1 Be sure to ground the body when handling the LCD Modules.

12.1.8.2 Tools required for assembly, such as soldering irons, must be properly ground.

12.1.8.3 To reduce the amount of static electricity generated, do not conduct assembly and other work under dry conditions.

12.1.8.4 The LCD Module is coated with a film to protect the display surface. Be care when peeling off this protective film since static electricity may be generated.

12.2 Storage precautions

12.2.1 When storing the LCD modules, avoid exposure to direct sunlight or to the light of fluorescent lamps.

12.2.2 The LCD modules should be stored under the storage temperature range. If the LCD modules will be stored for a long time, the recommend condition is:

Temperature : 0℃ ～ 40℃ Relatively humidity: ≤80%

12.2.3 The LCD modules should be stored in the room without acid, alkali and harmful gas.

12.3 Transportation Precautions

12.3.1 The LCD modules should be no falling and violent shocking during transportation, and also should avoid excessive press, water, damp and sunshine.

TIANMA CONFIDENTIAL

The information contained herein is the exclusive property of TIANMA MICRO-ELECTRONICS Corporation and shall not be distributed, reproduced, or disclosed in whole or in part without prior written permission of TIANMA MICRO-ELECTRONICS Corporation.

One step solution for LCD / PDP / OLED panel application: Datasheet, inventory and accessory! www.panelook.com